Product Code	**CS1-3** **Cleaners sink with legs**
Product Code	CS1 Cleaners sink only
Product Code	CS3 Legs only
Description	Cleaners sink with adjustable floor legs and hinged grate
Material	304 grade Stainless Steel
Material Thickness	0.9mm
Material Surface Finish	Satin Finish
Type of Mounting	Wall / Floor mounted with CS3 Brackets 450 mm – 495 mm Height adjustment
Overall Size	555 x 455mm
Bowl Size	480 x 380mm
Overall Depth of Bowl	220mm
Capacity	32 Litres
Outlet Size	90mm

Options – Sold Separately

BW90S

PW9050

Optional separate piece splashback available
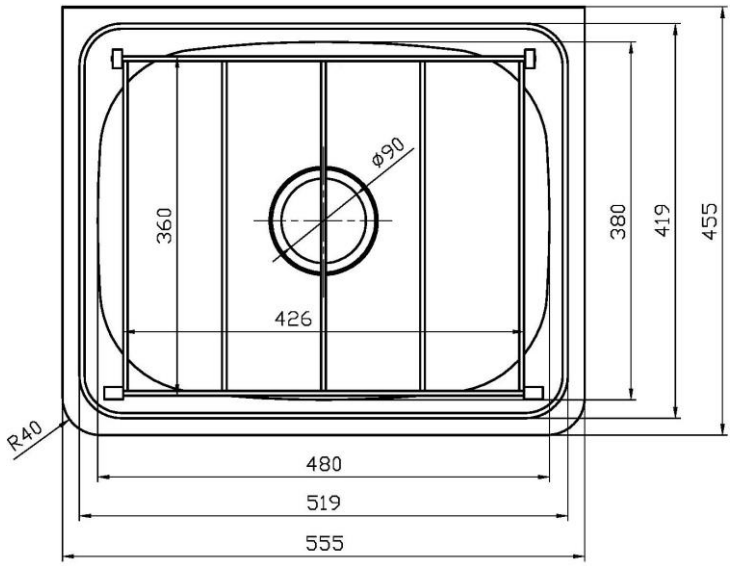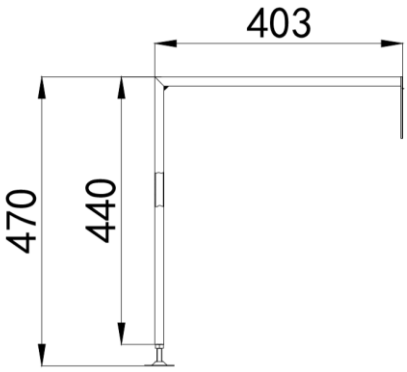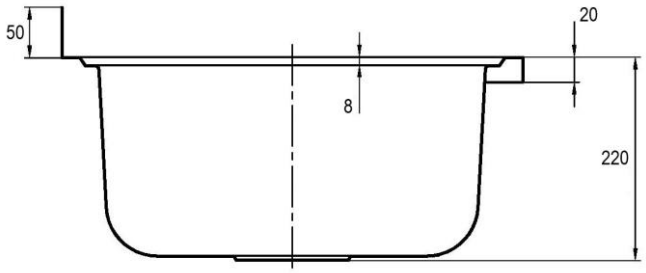
SBACK-300 300mm high
SBACK-450 450mm high
SBACK-600 600mm high